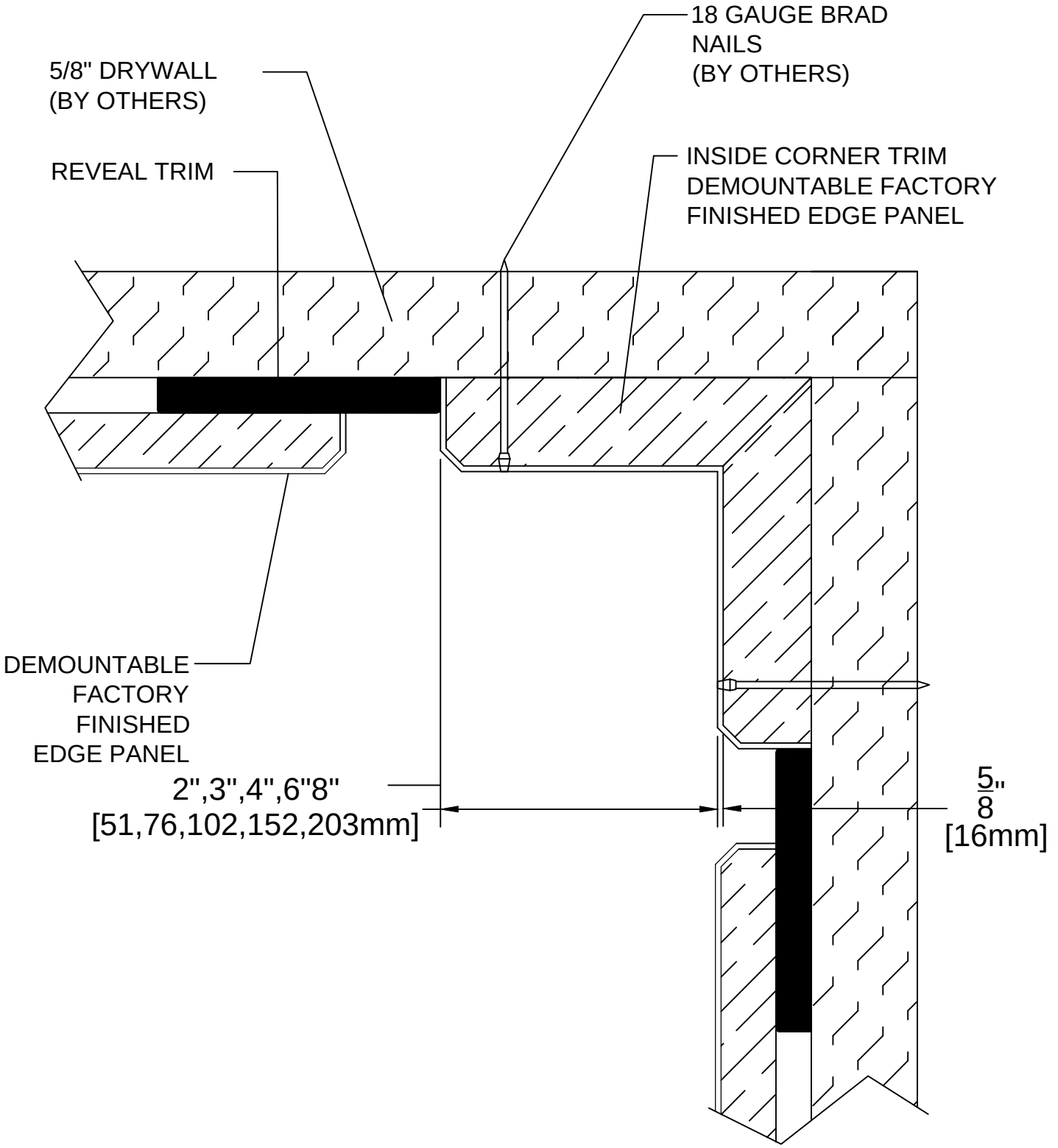

IPC™ DOOR + WALL PROTECTION SYSTEMS	DATE: 07/01/13	Palladium® Wall Panels Demountable, Factory Finished Edge, Inside Corner Trim	inpro®
	SCALE 1:1		
	DOC.CADIPC.099/rev1		

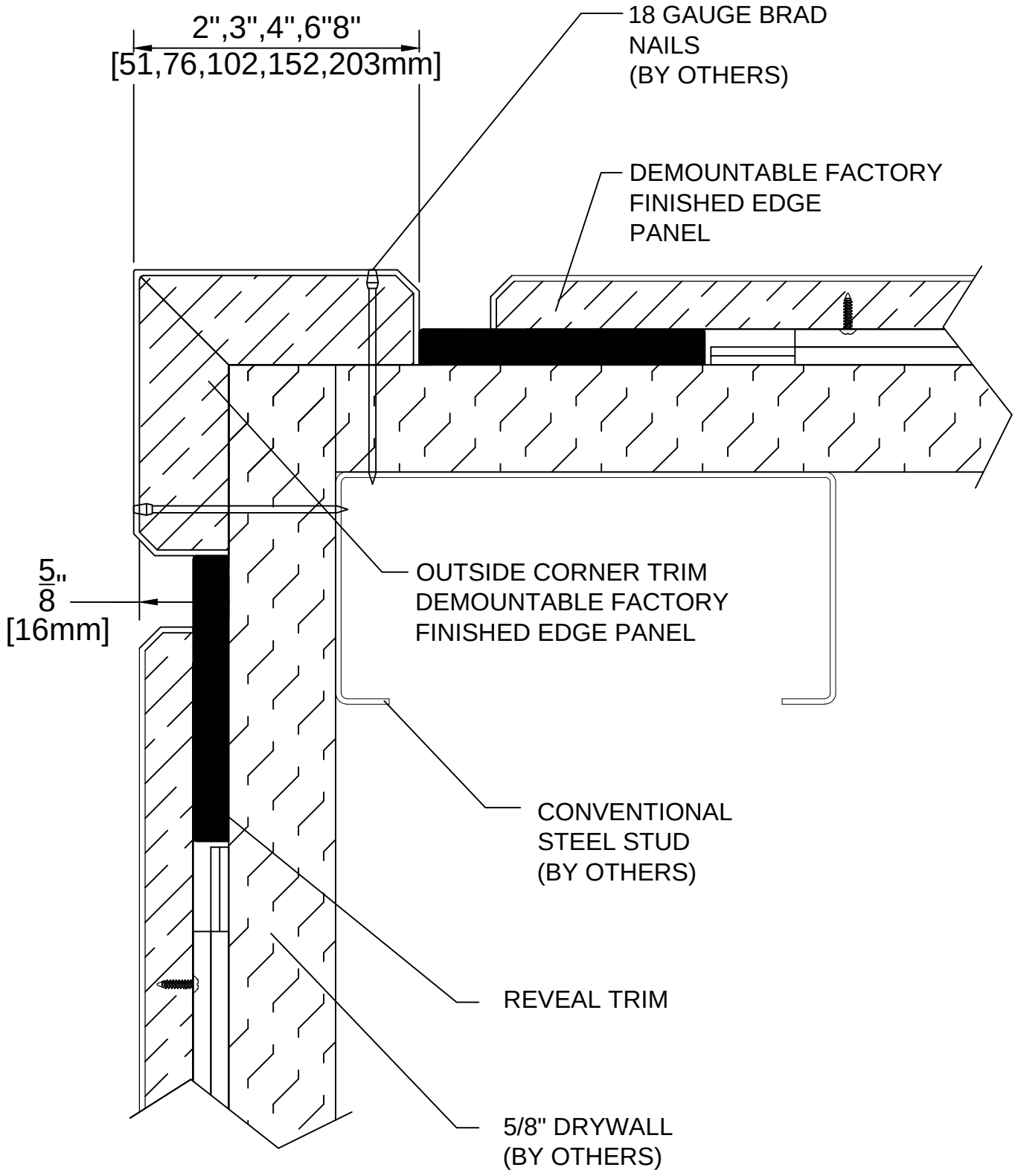

IPC™ DOOR + WALL PROTECTION SYSTEMS	DATE: 07/01/13	Palladium® Wall Panels Demountable, Factory Finished Edge, Outside Corner Trim	inpro®
	SCALE 1:1		
	DOC.CADIPC.099/rev1		

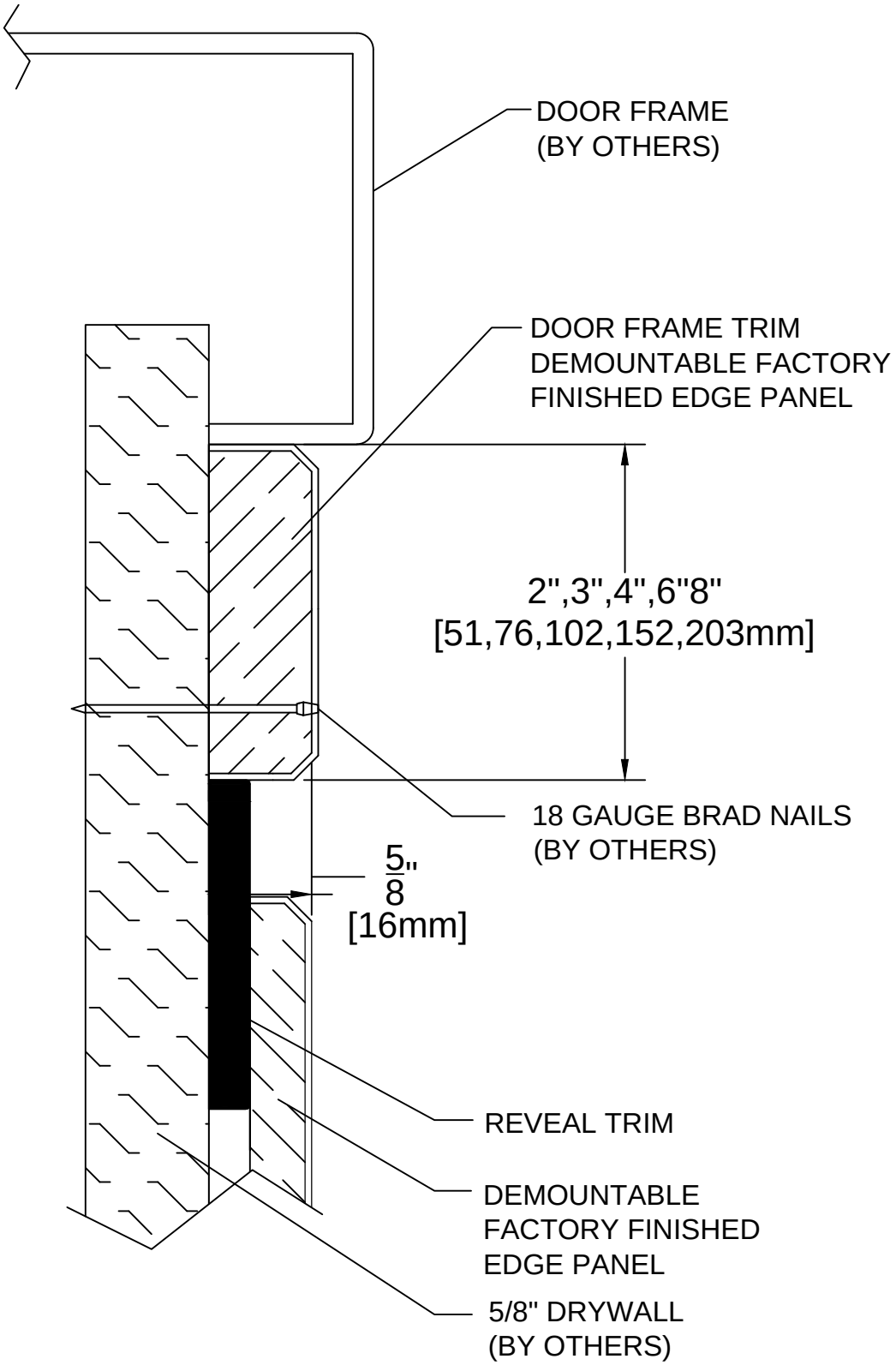

IPC™ DOOR + WALL PROTECTION SYSTEMS	DATE: 07/01/13	Palladium® Wall Panels Demountable, Factory Finished Edge, Door Frame Trim	inpro®
	SCALE 1:1		
	DOC.CADIPC.099/rev1		